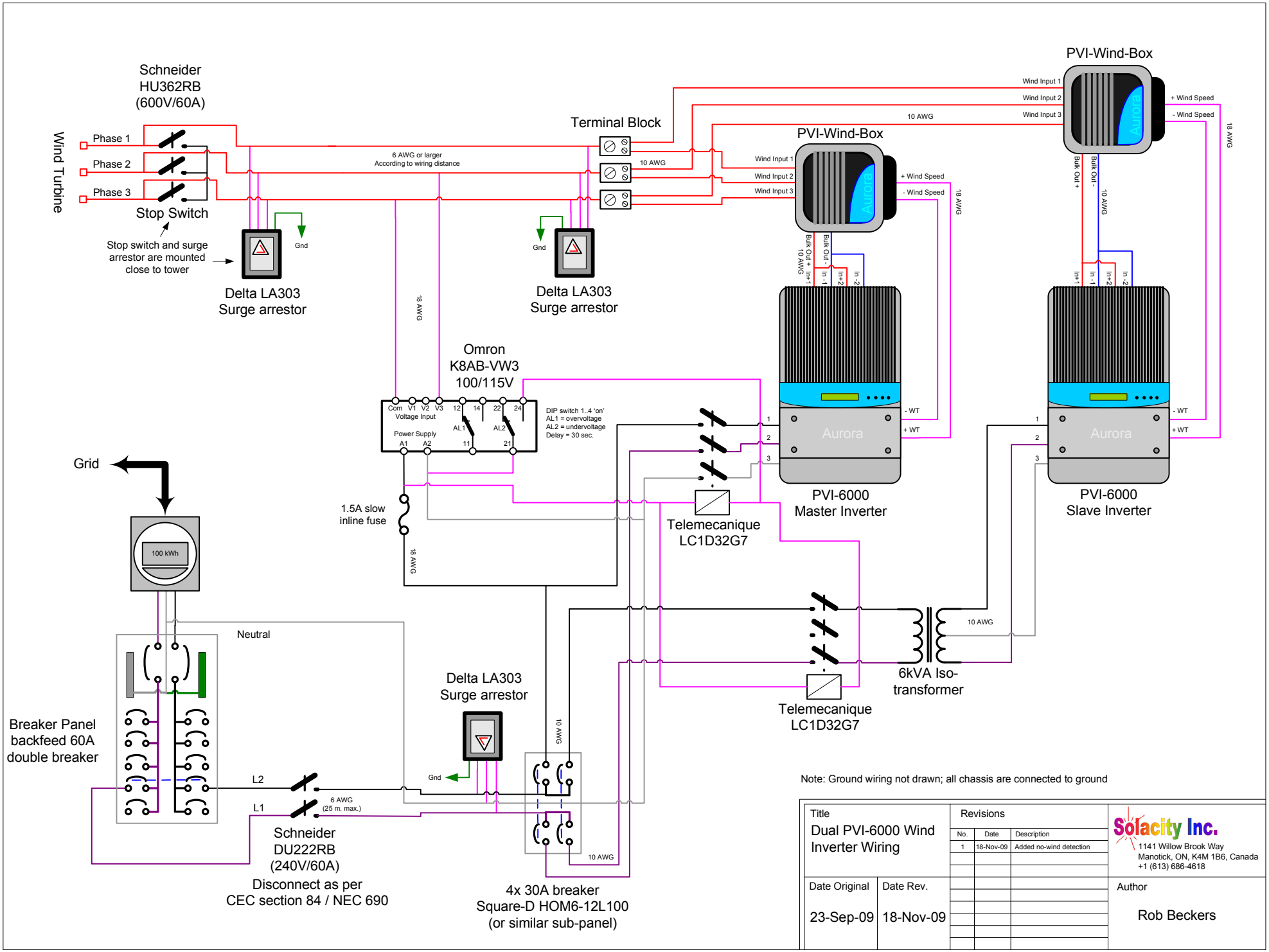
Wind Turbine
Phase 1
Phase 2
Phase 3
Schneider
HU362RB
(600V/60A)
Stop Switch
Stop switch and surge arrestor are mounted close to tower
Gnd
Delta LA303
Surge arrestor
6 AWG or larger
According to wiring distance
18 AWG
Terminal Block
10 AWG
Gnd
Delta LA303
Surge arrestor
PVI-Wind-Box
Wind Input 1
Wind Input 2
Wind Input 3
+ Wind Speed
- Wind Speed
Aurora
Bulk Out +
Bulk Out -
In +1
In -1
In +2
In -2
- WT
+ WT
PVI-6000
Master Inverter
PVI-6000
Slave Inverter
Omron
K8AB-VW3
100/115V
Com V1 V2 V3
Voltage Input
Power Supply
A1 A2
AL1
AL2
DIP switch 1..4 'on'
AL1 = overvoltage
AL2 = undervoltage
Delay = 30 sec.
1.5A slow
inline fuse
Telemecanique
LC1D32G7
Grid
100 kWh
Neutral
Breaker Panel
backfeed 60A
double breaker
L2
L1
6 AWG
(25 m. max.)
Schneider
DU222RB
(240V/60A)
Disconnect as per
CEC section 84 / NEC 690
Delta LA303
Surge arrestor
4x 30A breaker
Square-D HOM6-12L100
(or similar sub-panel)
6kVA Iso-
transformer
Note: Ground wiring not drawn; all chassis are connected to ground
Title
Dual PVI-6000 Wind
Inverter Wiring
Revisions
No. Date Description
1 18-Nov-09 Added no-wind detection
Solacity Inc.
1141 Willow Brook Way
Manotick, ON, K4M 1B6, Canada
+1 (613) 686-4618
Date Original
23-Sep-09
Date Rev.
18-Nov-09
Author
Rob Beckers