Scirocco Wind Turbine
Typical Grid-tie Hookup

Note 1: Wire sizes are minimum recommended sizes! Actual diameter is subject to local electrical codes, and length.

Note 2: Initially set thermal breaker to 18A. In case of nuisance tripping, reset, verify that all three phases are delivering current, then increase breaker setting in ½ Ampere increments.

Note 3: The thermal breaker is there to protect the turbine in case a phase gets disconnected. Extended running on two phases will damage the alternator!

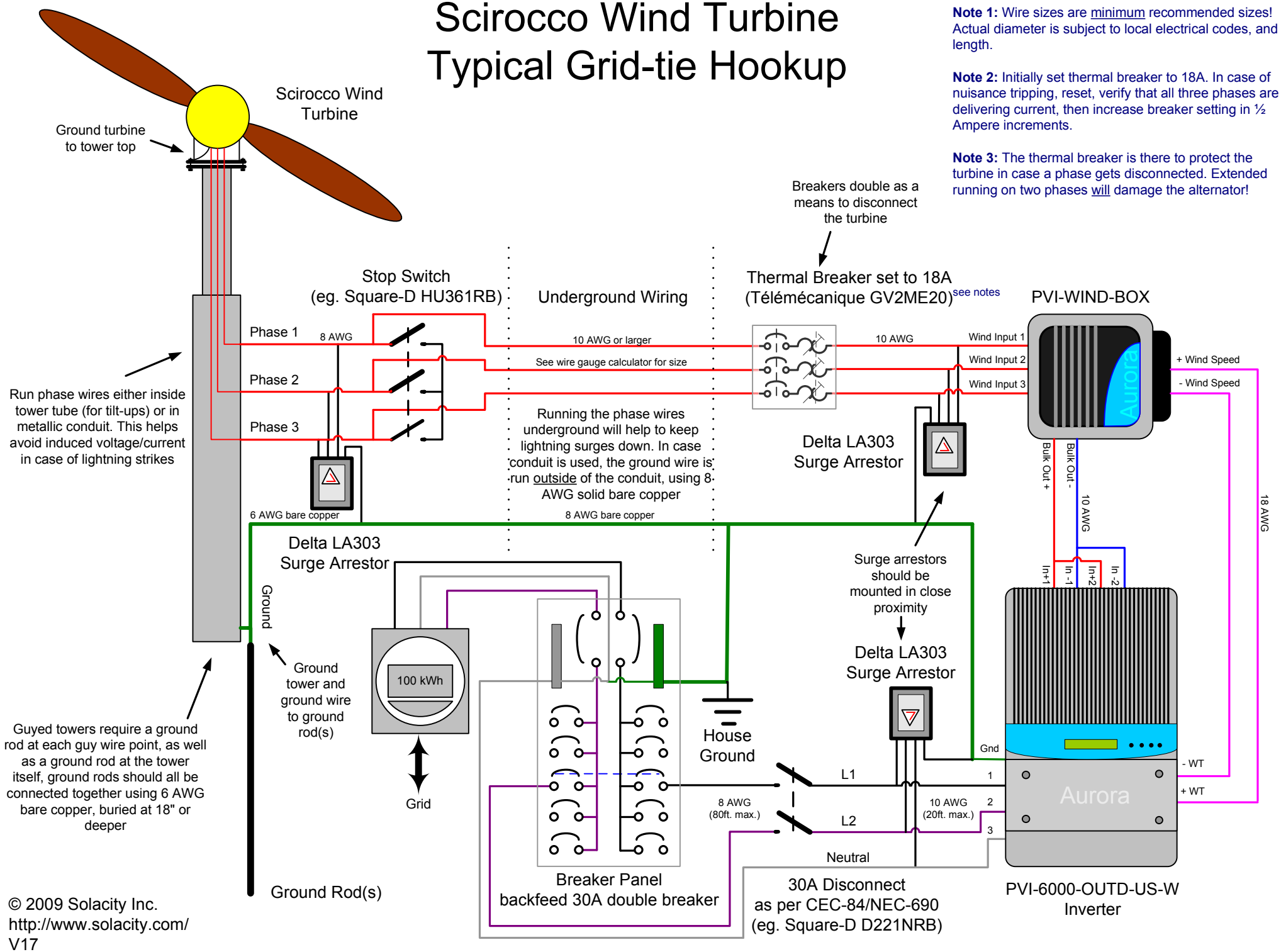

© 2009 Solacity Inc.
http://www.solacity.com/
V17